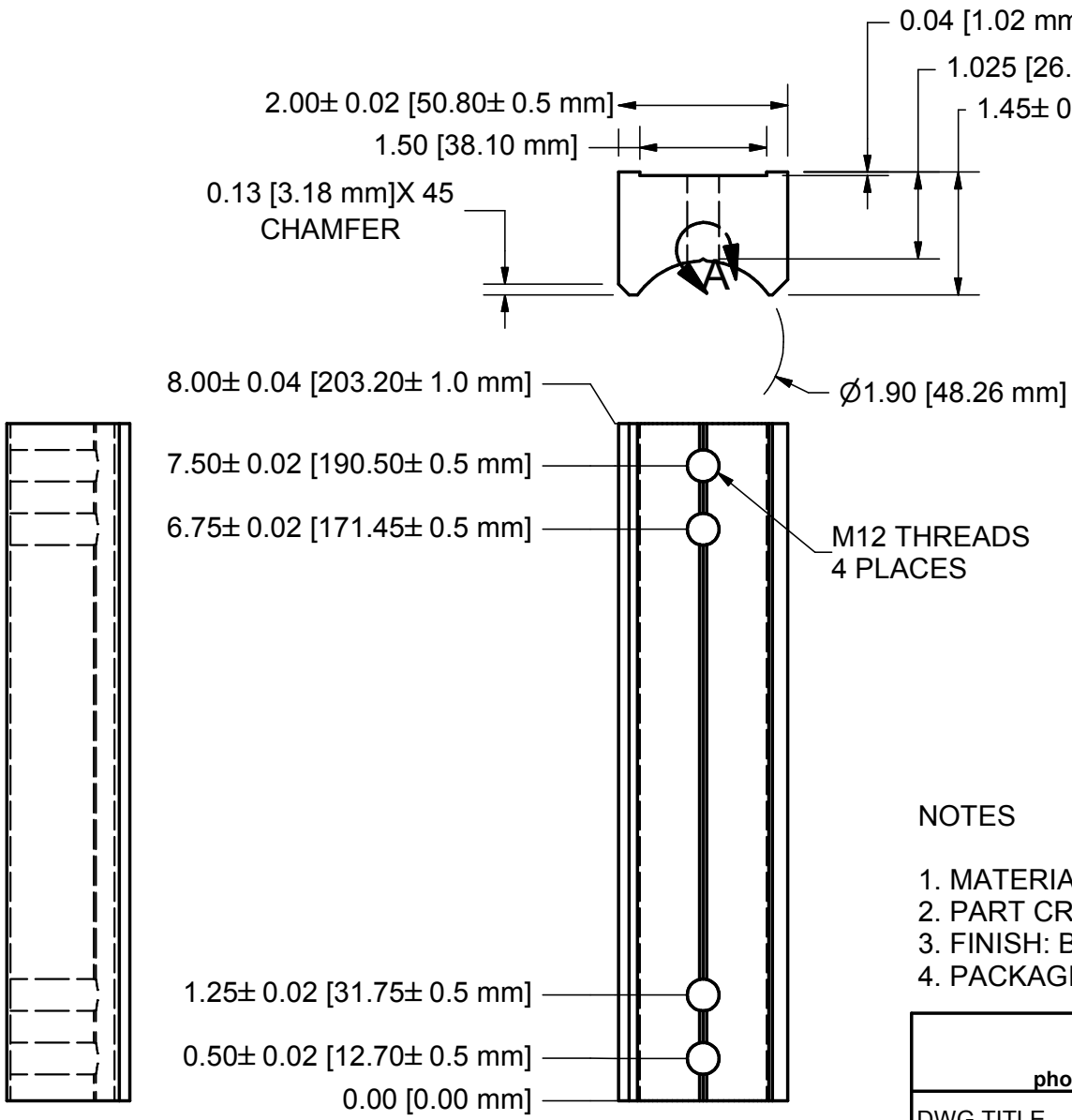

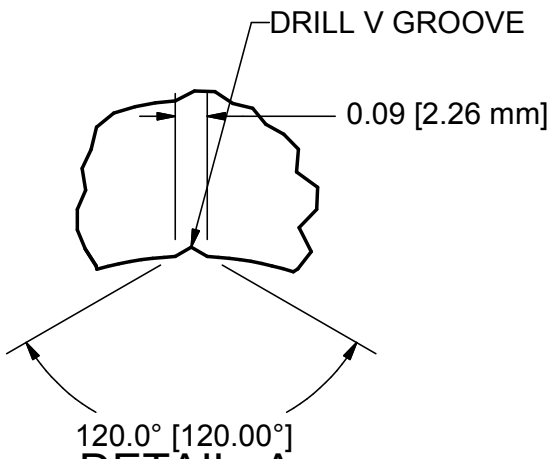

DETAIL A
SCALE 2 : 1

NOTES

1. MATERIAL: 6061 OR 6063 ALUMINUM.
2. PART CROSS SECTION IS EXTRUDED.
3. FINISH: BRITE DIP ANODIZE.
4. PACKAGING: BUBBLE OR POLY FILM WRAP.

Fishmaster, Inc

phone 678-679-1462 - www.Fishmaster.com

DWG TITLE
MOUNT BRACKET

DWG FILE
RIB TOWER MOUNT BRACKET.idw

DATE 2/20/2009 | REV P1

The information contained in this drawing is the sole property of Fishmaster, Inc. Reproduction without written permission of Fishmaster, Inc. is strictly prohibited.